Chamber Matching at Sputter Clean Chambers with Inductively Coupled Plasma

N. Urbansky(1) S. Franke(1), T. Beger(1), M. Watzke(1), M. Klick(2), R. Rothe(2)

(1) Infineon Technologies Dresden, Germany

(2) Plasmetrex GmbH Berlin, Germany

Content

- Sputter etch process – pre clean before sputter deposition
- Inductively coupled plasma
- Chamber matching and RF power losses
- Detection of chamber matching problems using plasma metrology

Sputter etch process – pre clean before sputter deposition

- Air (oxygen) in contact holes leads to increased contact resistance.
- Sputter etch process for cleaning and oxide removing.
- Small etch rate and small ion energy (radiation damages in silicon crystal for higher ion energy).
- Low process pressure is recommended (redeposition, reoxidation is possible by higher process pressure).
- The plasma process is near at the pressure limit.
- Inductive coupled plasma :
  - High ion density and small ion energy.
  - Separate ion energy control by bias power.

Salicide process

- Surface cleanliness before deposition is extremely important
- The native oxide can be removed with a wet dip but this limits the queue time between the dip and metal deposition
- An in-situ sputter clean provides more flexibility in terms of the queue time.
- The amount of sputter clean required is between 25-50A of oxide

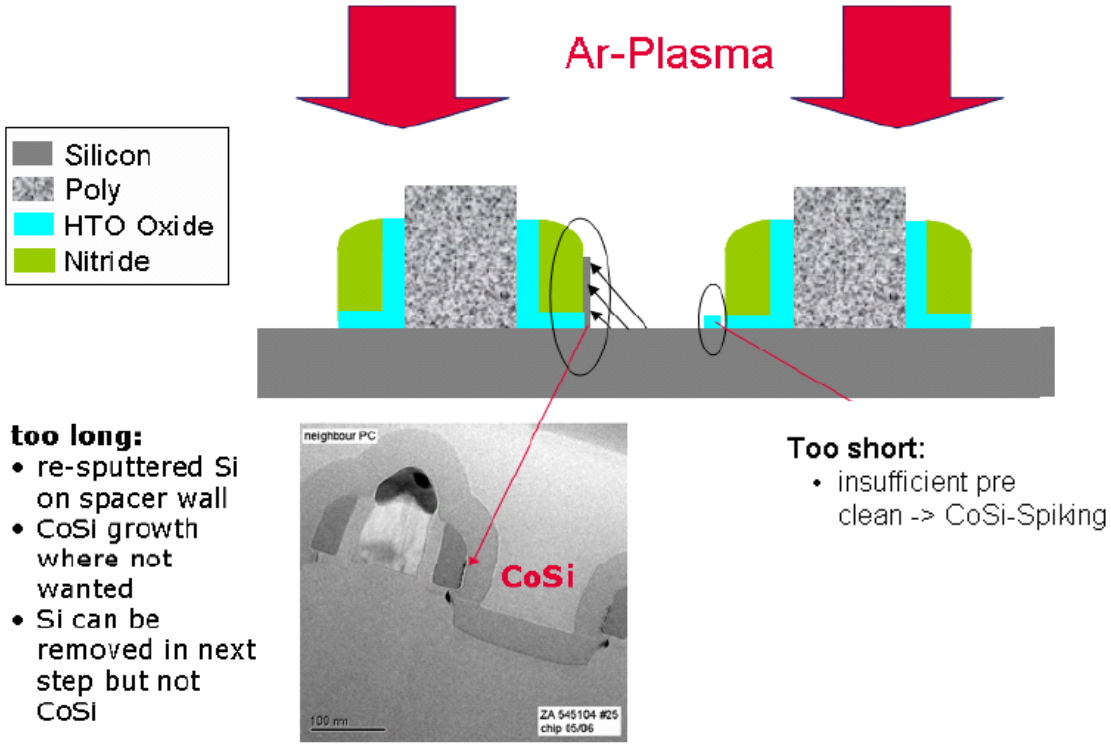

Too short:

- insufficient pre

clean -> CoSi-Spiking

Situation in 2009

- Process controll
  - Daily check on thermal oxide
  - Oxide etch removal 5nm

- Impact on products
  - Different etch rates causes yieldloss and parameter shift based on product design
  - Etch chambers had to be blocked for certain products

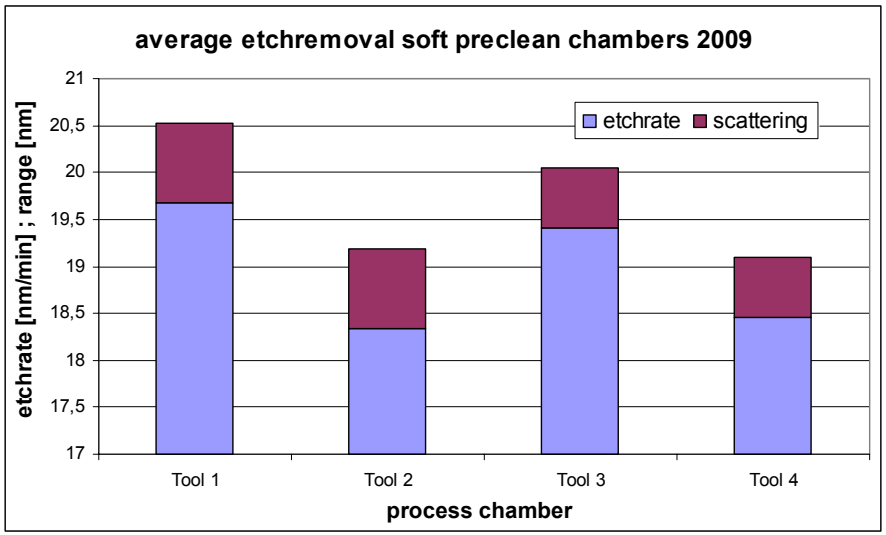

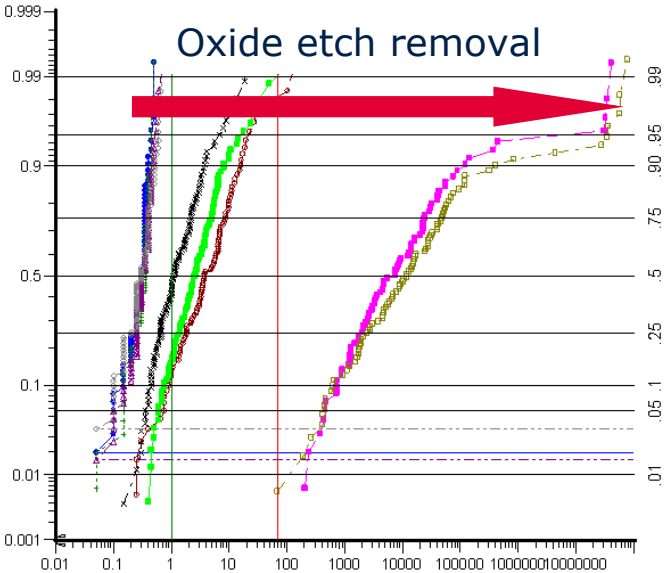

BLBL leakage depends on sputter depth

Cold Soft Etch chamber

Preclean chamber with two different RF couplings:

- Inductive coupling (ICP, inductively coupled plasma) for plasma generation
- Capacitive coupling for BIAS control (etch)

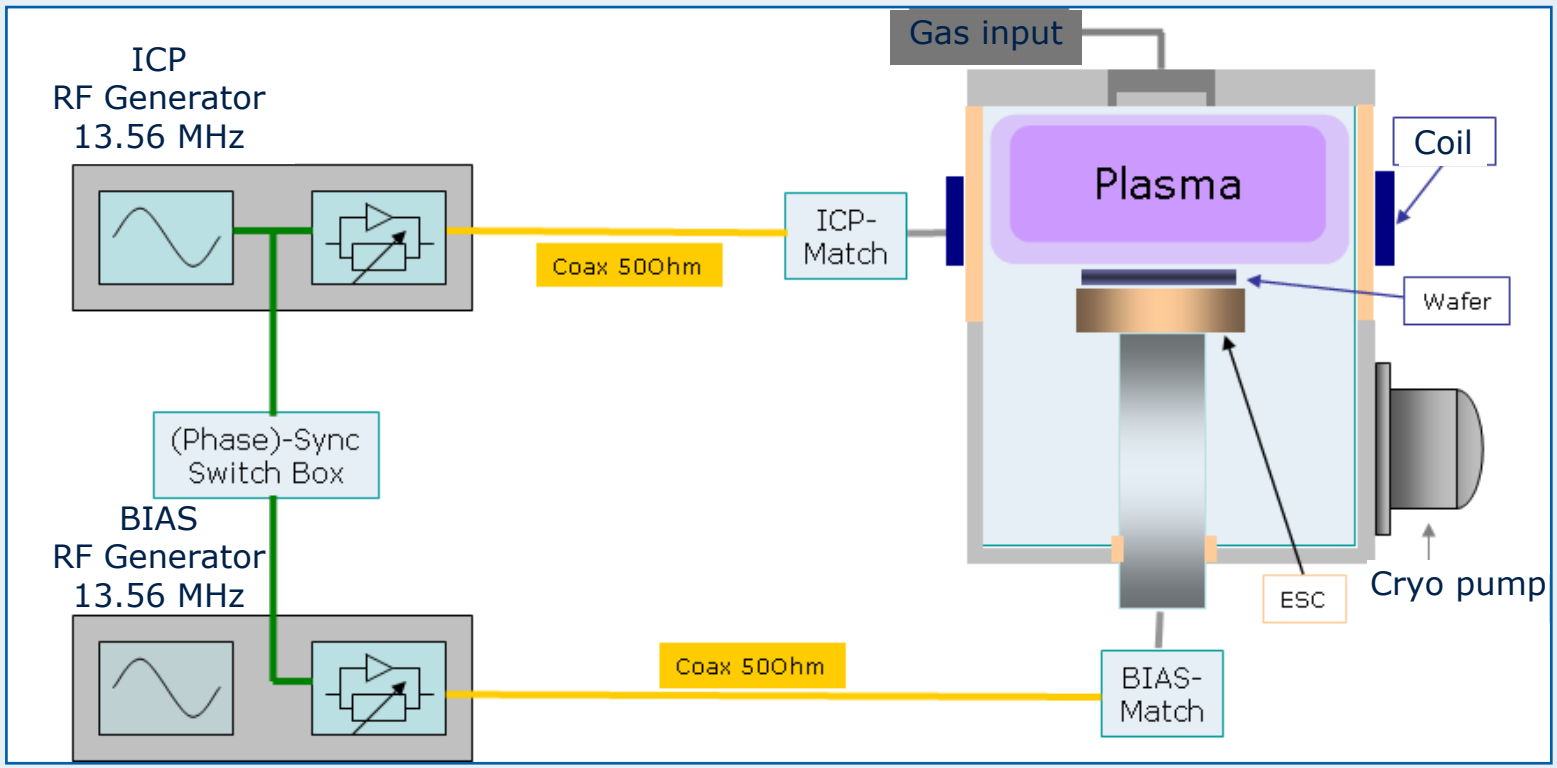

RF-system of CSE-chamber

Inductive coupled plasma – 2 main problems

1. Plasma mode: E and H mode

- Every ICP plasma ignites in E mode!
- If the ICP power is high enough to yield a high electron plasma density, the plasma switches to H mode.
- If RF losses are too high, the plasma remains in E mode.

2. Phase angle

- Two generators with the same frequency (13.56 MHz).
- Capacitively coupling from 'hot' end of coil and electrode (Chuck).
- Phase angle difference affects sheath potentials and ion energy at wafer.
- The ion energy affects etch (sputter) rate and crystal damages.

1. Ignition, E and H mode

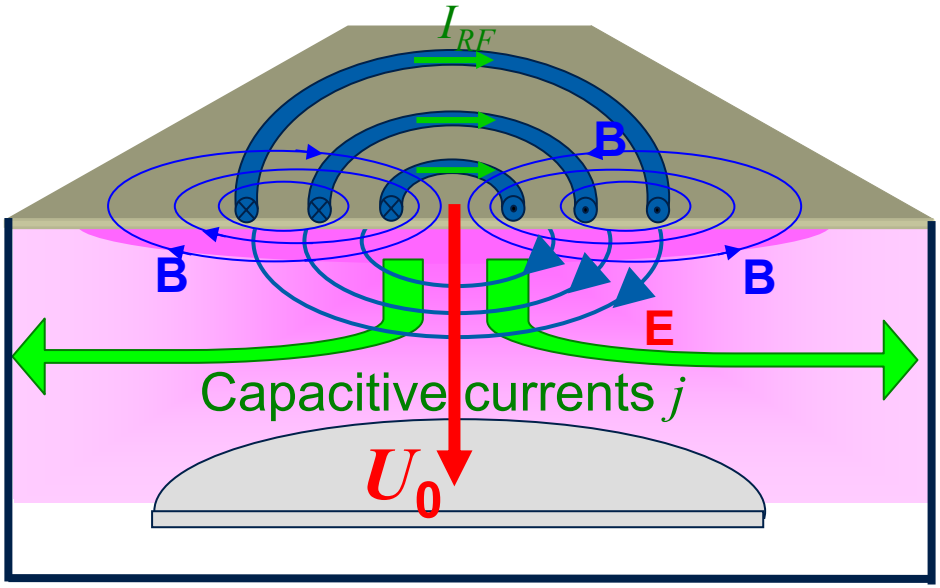

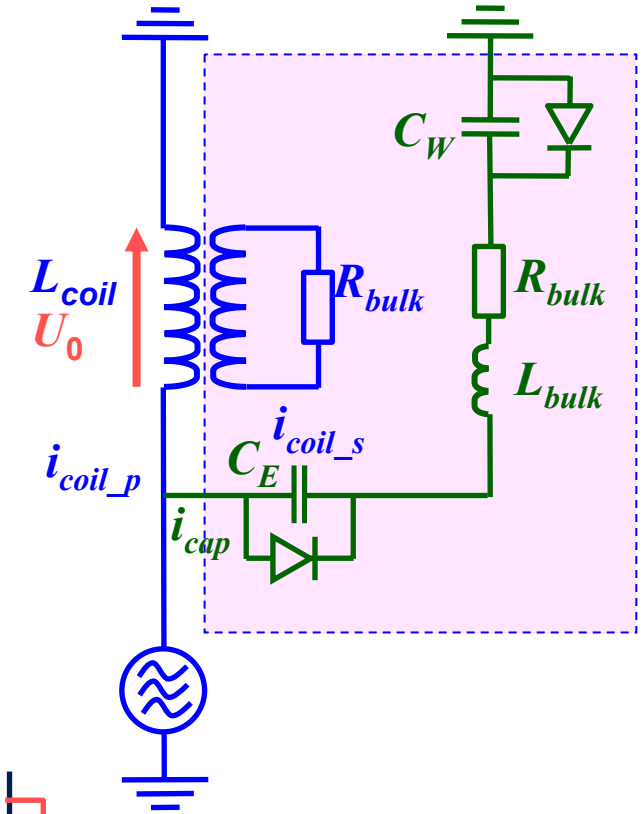

- RF Switch on:
  - High U_0 → Ignition in E-mode
- Low RF power:
  - High R_{bulk} → Low i_{coil_s}
  - High U_0 → Plasma in E-mode
- High RF power:
  - Low R_{bulk} → High i_{coil_s}
  - Low U_0 → Plasma in H-mode

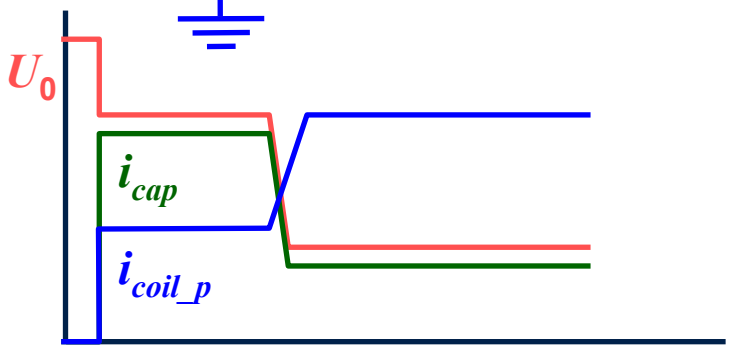

E-mode → capacitively coupled H-mode → inductively coupled

Chamber matching and RF power losses

- Main reason for undefined plasma mode: RF power losses
- In case of high ICP-power losses the plasma remains in the E-mode.
- RF power losses depended on:
  - Aging of RF parts
    - Contacts
    - Eddy currents
    - Ceramic
  - Second source parts
  - Chamber improvement
  - Matchbox (new / old)

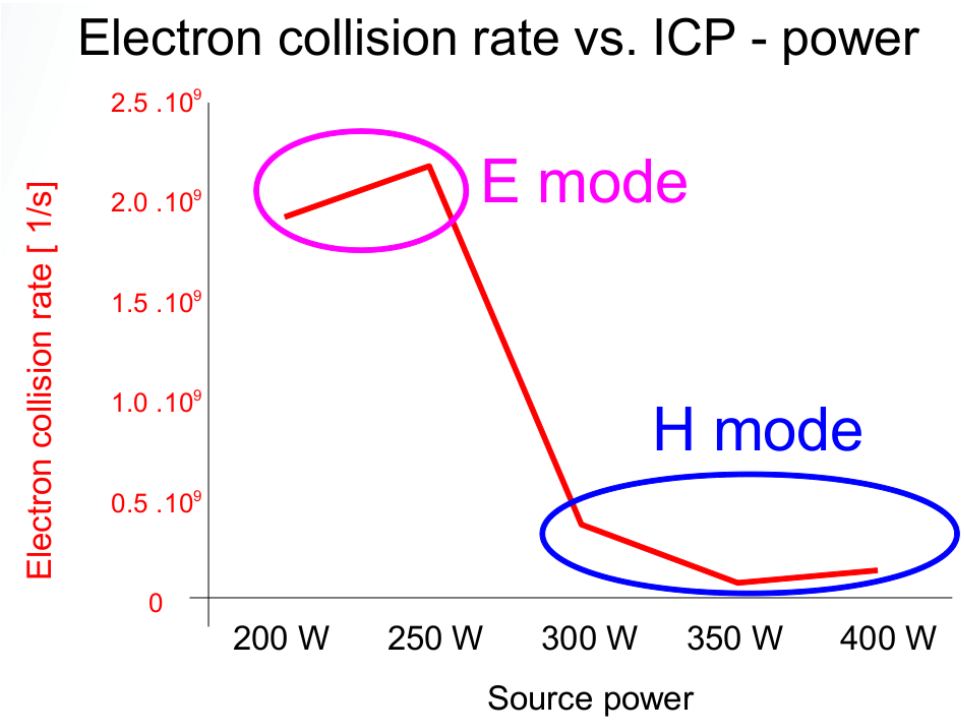

The effect of ICP mode at the chamber check

- Process control by etch rate of test wafers
- Sputter etch process:
  Etch rate depends on ion energy and ion current.

$$E_H \cdot j_{+H} = E_E \cdot j_{+E}$$

  - E_H – ion energy for H – mode
  - E_E – ion energy for E - mode
  - J_{+H} – ion current for H - mode
  - J_{+E} – ion current for E - mode

  - E – mode: small ion density, but high ion energy,
    → high radiation crystal damages!
  - H – mode: high ion density, but small ion energy
- Etch rate can be similar, chamber seems to be in spec!

2. phase angle

- Capacitive coupling through dielectric window (about 2/3 of power inductively about 1/3 of power capacitively)
- Phase angle between upper and lower capacitive coupling affects sheath potentials and ion energy!
- → Generator synchronization

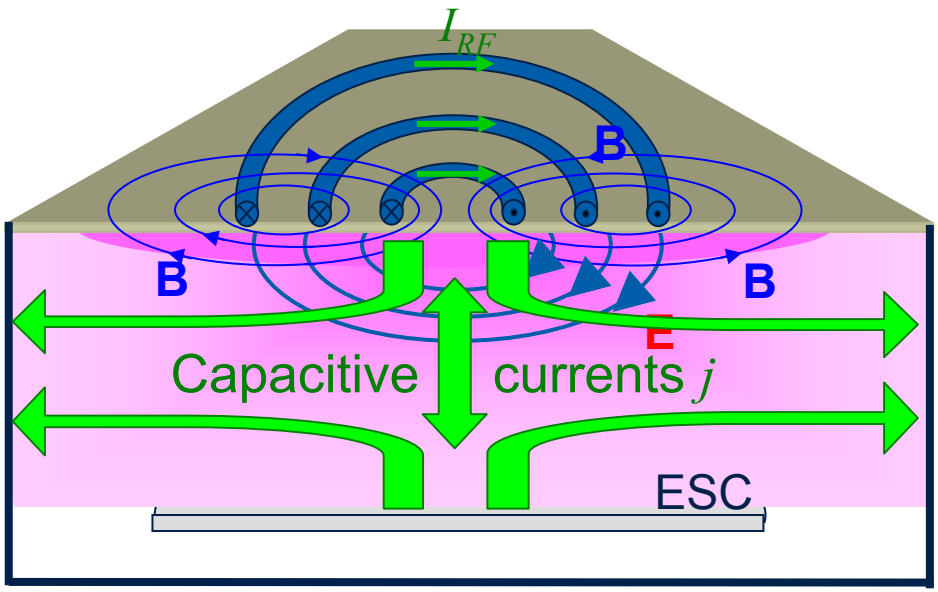

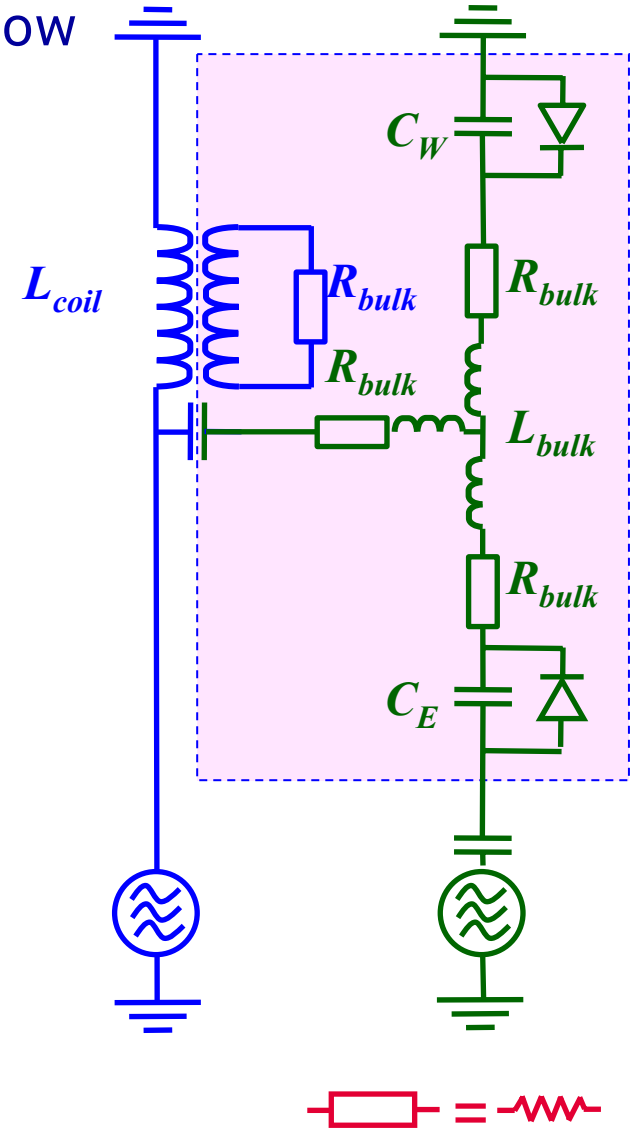

Synchronisation RF-coupling

- Stable and comparable parameters seen with RF-configuration at 180°
- Electron and ion densities depend on phase angle.
- Ion current depends on phase angle.

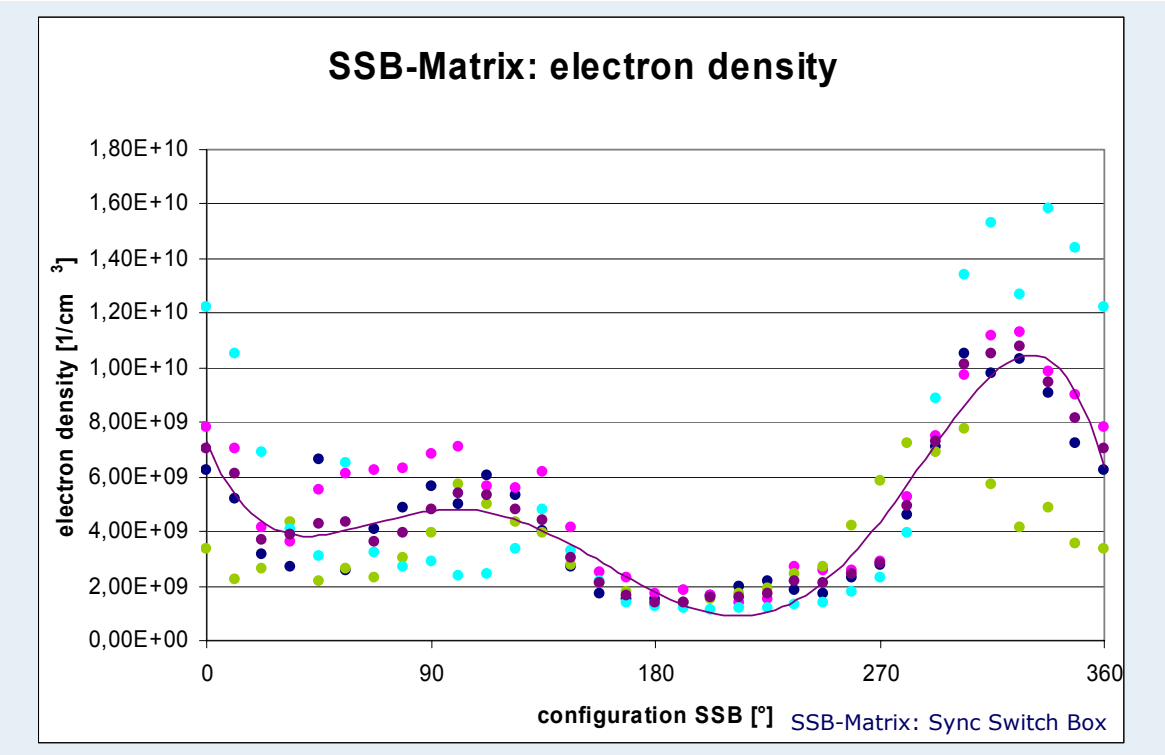

M. Watzke, 2009, Westsächsische Hochschule Zwickau, Diplomarbeit.

Synchronization RF-Power

- Interaction of 2 electric fields with the same frequency
  - Sheath voltage depends on phase angle.
  - Ion energy depends on sheath voltage.

Sync Switch Box

- Adjustable movement dependent from:
  - coax cable length
  - Adjustment Sync Switch Box

- **S**ync **S**witch **B**ox - Matrix
  - Adjustment per 1/32λ
  - 1 Period

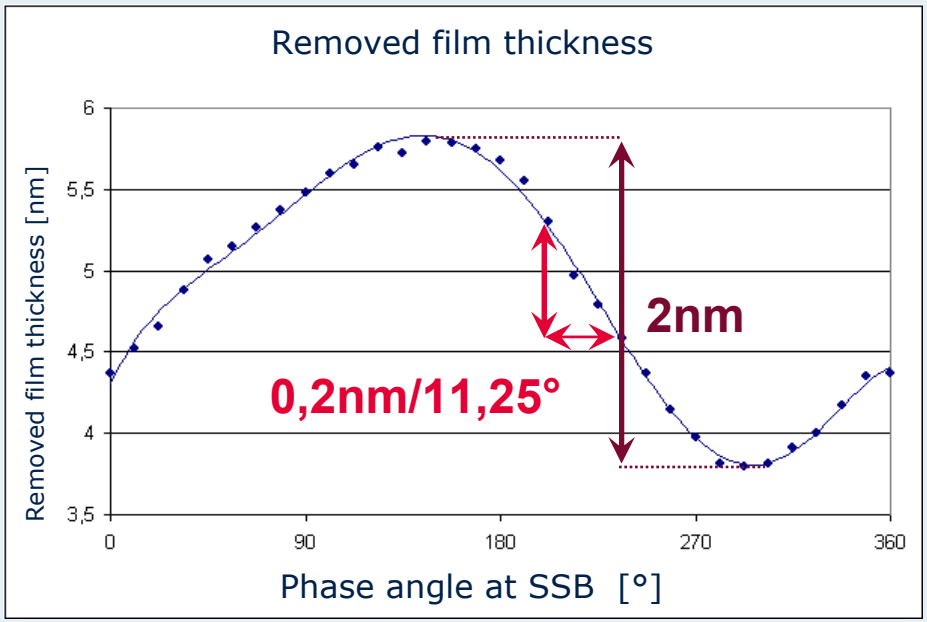

measured etch removal

M. Watzke, 2009, Westsächsische Hochschule Zwickau, Diplomarbeit.

Summary

- Optimized RF-Setup

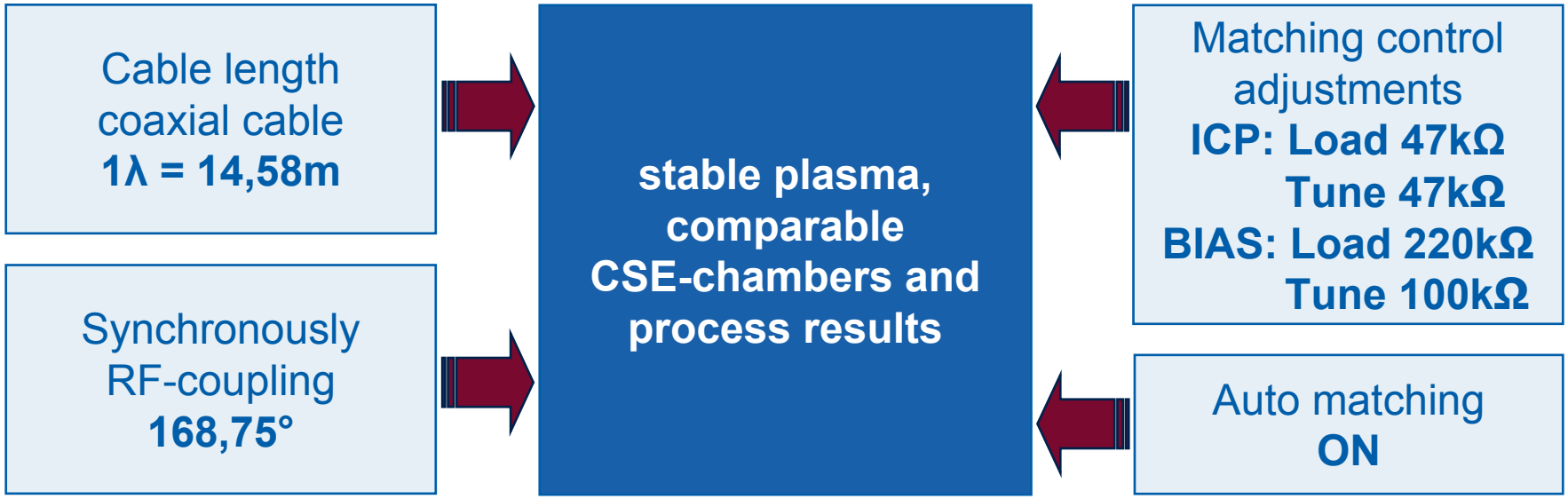

- Only certain RF-power input enables stable plasma in H-mode.
- Well-defined phase angle at chamber provides well defined plasma parameters and etch rate.

Results

- all Low-Power CSE-chambers are comparable
- no more significant differences in etch rate
- comparable HERCULES®-data of all our chambers, also comparable for APC-analysis
- defined RF-Setup, no subjective adjustments

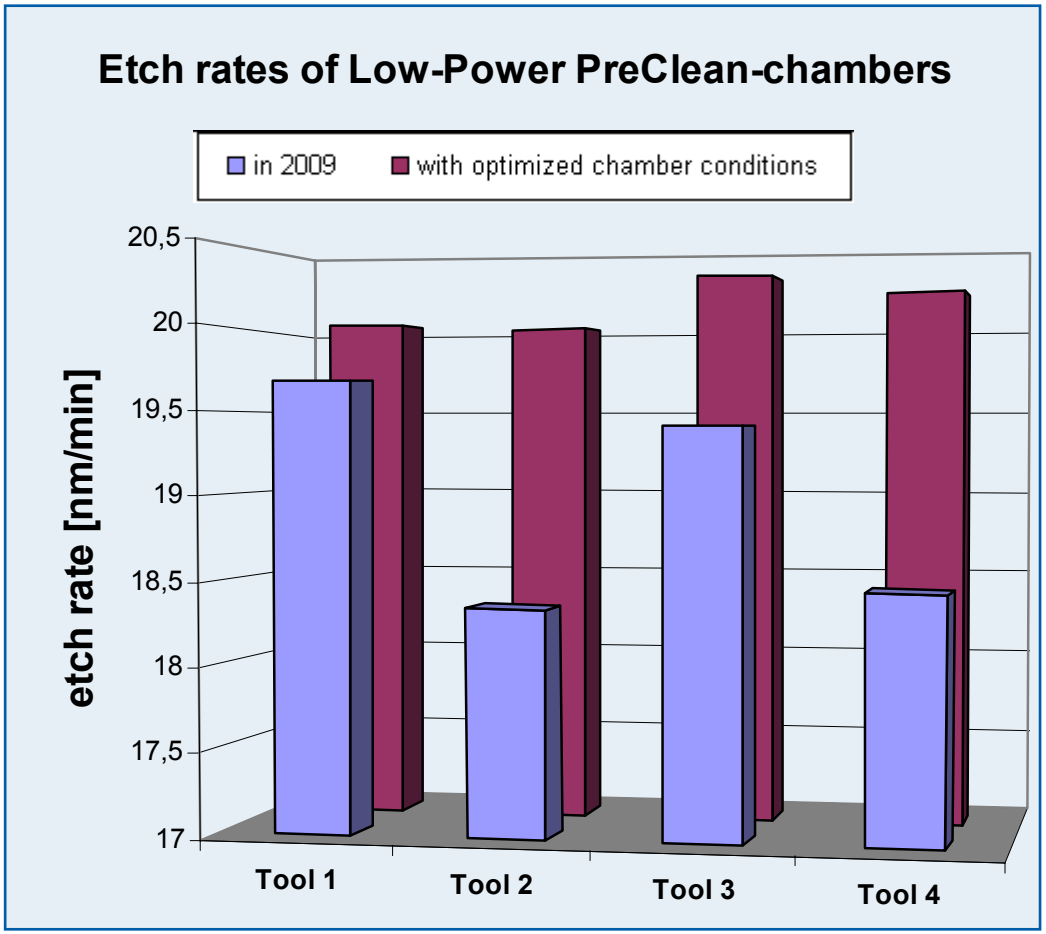

ENERGY EFFICIENCY
MOBILITY
SECURITY

Innovative semiconductor solutions for energy efficiency, mobility and security.