Smart Spare Part Management And Chamber Matching In III-V Plasma Etching

H.P. Maucher[1], G. Boedege[1], and M. Klick[2]
[1] United Monolithic Semiconductors GmbH, Ulm, Germany
[2] Plasmetrex GmbH, Berlin, Germany

Outline

- Tool and spare parts management
- Model-based Sensor
- Process adaptation and spare parts change control
- Conclusions

Why Spare Parts Management for Plasma Processes ?

- **Any part in contact with the plasma impacts the process.**
- **Spare parts are a major cost driver.**
- **So often second-source parts are used – with sometimes different properties !**
- **The process stability depends in particular on large-area parts:**
  - Surface temperature if not well controlled (ceramics)
  - Chemical surface conditions, in particular in case of memory effects
  - In particular if regularly cleaning during PM causes seasoning

Critical Spare Parts of an ICP etcher – Ceramic Wall

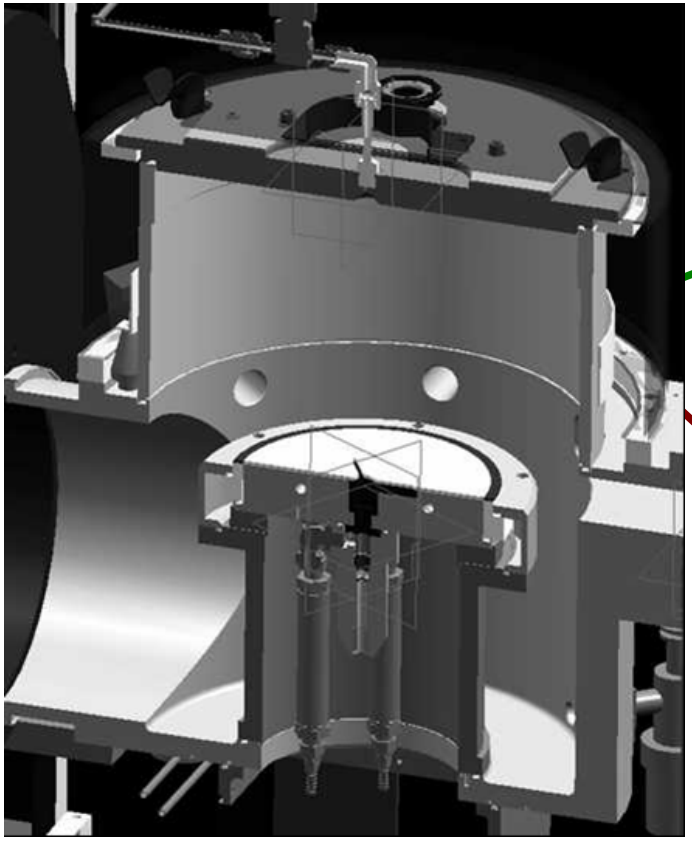

After PM

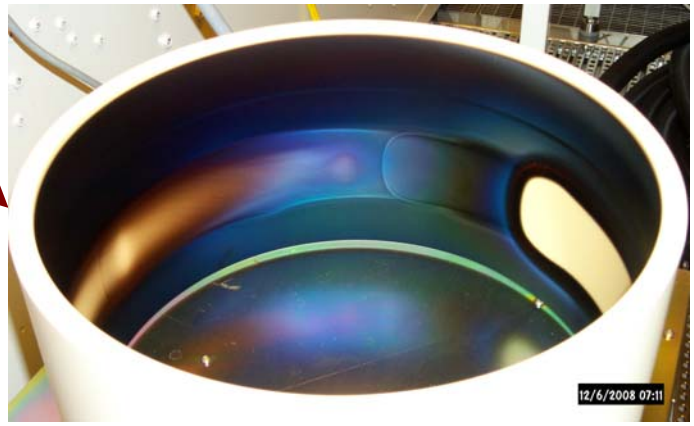

Before PM

Spare Parts Management – Different Approaches

- **Spare parts management**
  - Scheduling
  - Qualification and characterization of second source parts
  - Tracking and monitoring of age and cleaning cycles of spare parts.

  - Control:
    - Product wafers → Message comes usually too late.
    - Test wafers → Necessary but not sufficient, not very sensitive.
    - Tool parameters → ?
    - Plasma parameters → ?

Tool and Processes

- Commercial ICP etcher used for III-V semiconductor manufacturing
- Data from one year manufacturing with logistic data
- Main focus: Impact of ceramic chamber walls from different suppliers to plasma process
- Current products still in spec, slight changes observed. Future products ??

Model-based sensor:
Self Excited Electron Resonance Spectroscopy (SEERS)

Grounded electrode or dielectric window for optional 'inductive' or 'capacitive' top power

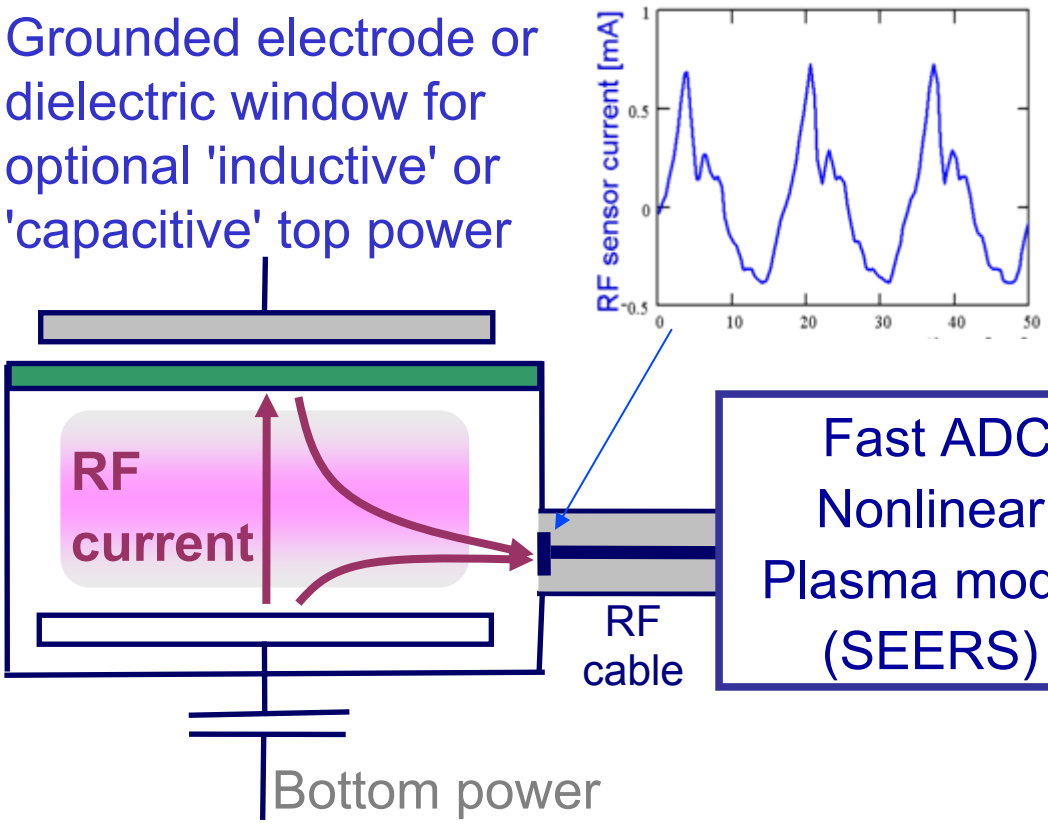

Fast ADC
Nonlinear
Plasma model
(SEERS)

Etch rate

Plasma density

Electron collision rate

Uniformity
Selectivity

$$R_{plasmabulk} = \frac{l}{A}\frac{v_e m_e}{q^2 n_e}$$

US Patents 5 705 931 and 5 861 752, European Patent EP 0 719 077 B1, Japanese Patent 2872954, other Patents pending.

Model-based Sensor:
Optimal Data Compression at Tool Level

- **Data compression example:**
  - **Raw data: 4 kB**
  - **Data Compression by parameter estimation in SEERS model**
  - **Final data: 0.12 kB**

- **Advantage of a real model over statistical approaches:**

  Exact separation of noise and real information and provides so <u>outstanding data quality and compression</u>.

Low Pressure Process Example

- **Anisotropic etching of dielectric with low damage**
  - CF_4, Ar
  - Low pressure 0.7 Pa (5 mTorr)

- **Medium bias power, due to low pressure no collision in sheath**

  → **Low but well defined ion energy keeps etch rate high but minimizes risk of wafer damage.**

- **Critical impact: Ceramic chamber wall changes during PM**

Low pressure: Tool Parameters – RF Peak Voltages

- The most sensitive tool parameters - RF peak voltages at and does not respond to spare part changes and process adaptation.
- Collision rate is in this low pressure regime only sensitive to process adaptation – due to stochastic heating of electrons.

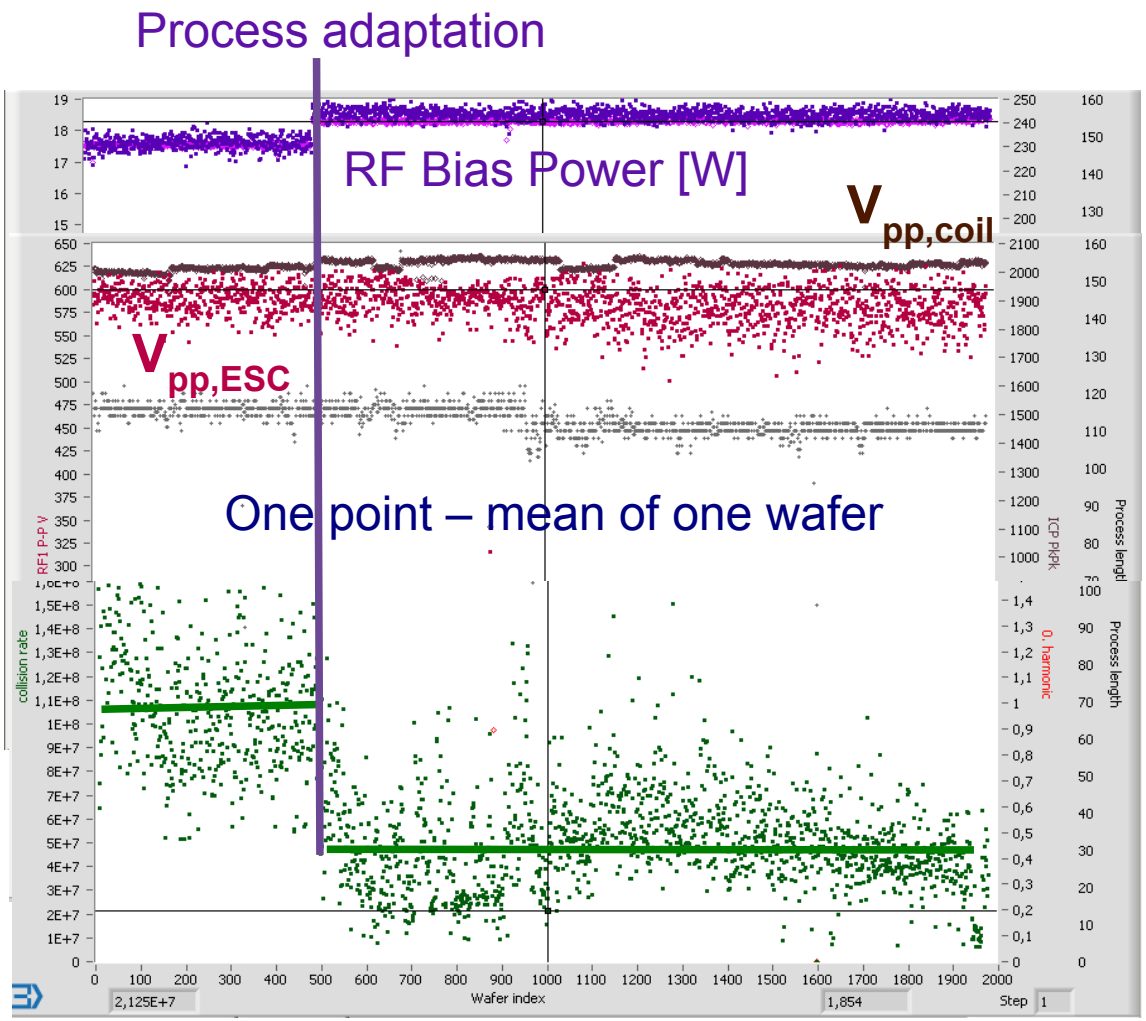

Low pressure: Plasma current and density

- Three different ceramic parts – same level in plasma current !
- One Second source ceramic - lower level.
- Plasma density is also but less affected fits to products parameters still in spec.

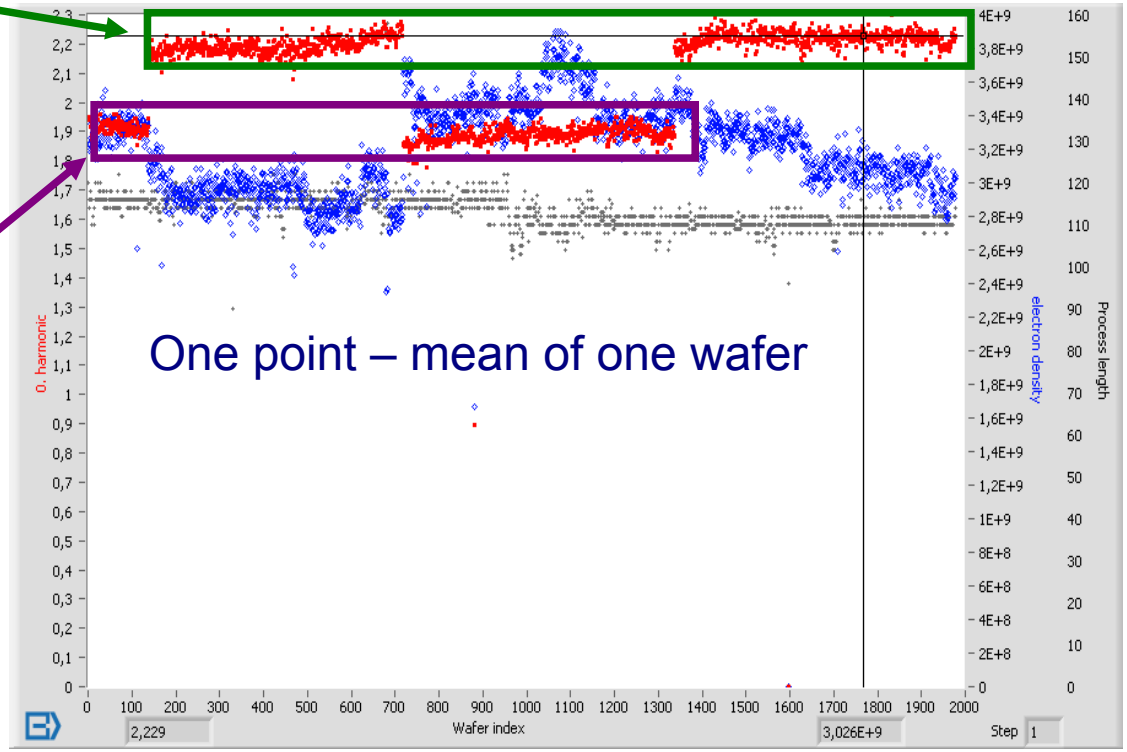

High Pressure Process Example

- **Isotropic etching with low damage, surface preparation and descum**
  - O2
  - Low pressure 11 Pa (80 mTorr)

- **Very low bias power**

→ **Mainly chemical (O) etching with very low ion energy.**

High pressure: Tool Parameters – RF Peak Voltages

- Vp from coil shows only a slight RF power adjustment, please compare RF power in diagram below.
- In both RF peak voltages no response to spare part change.

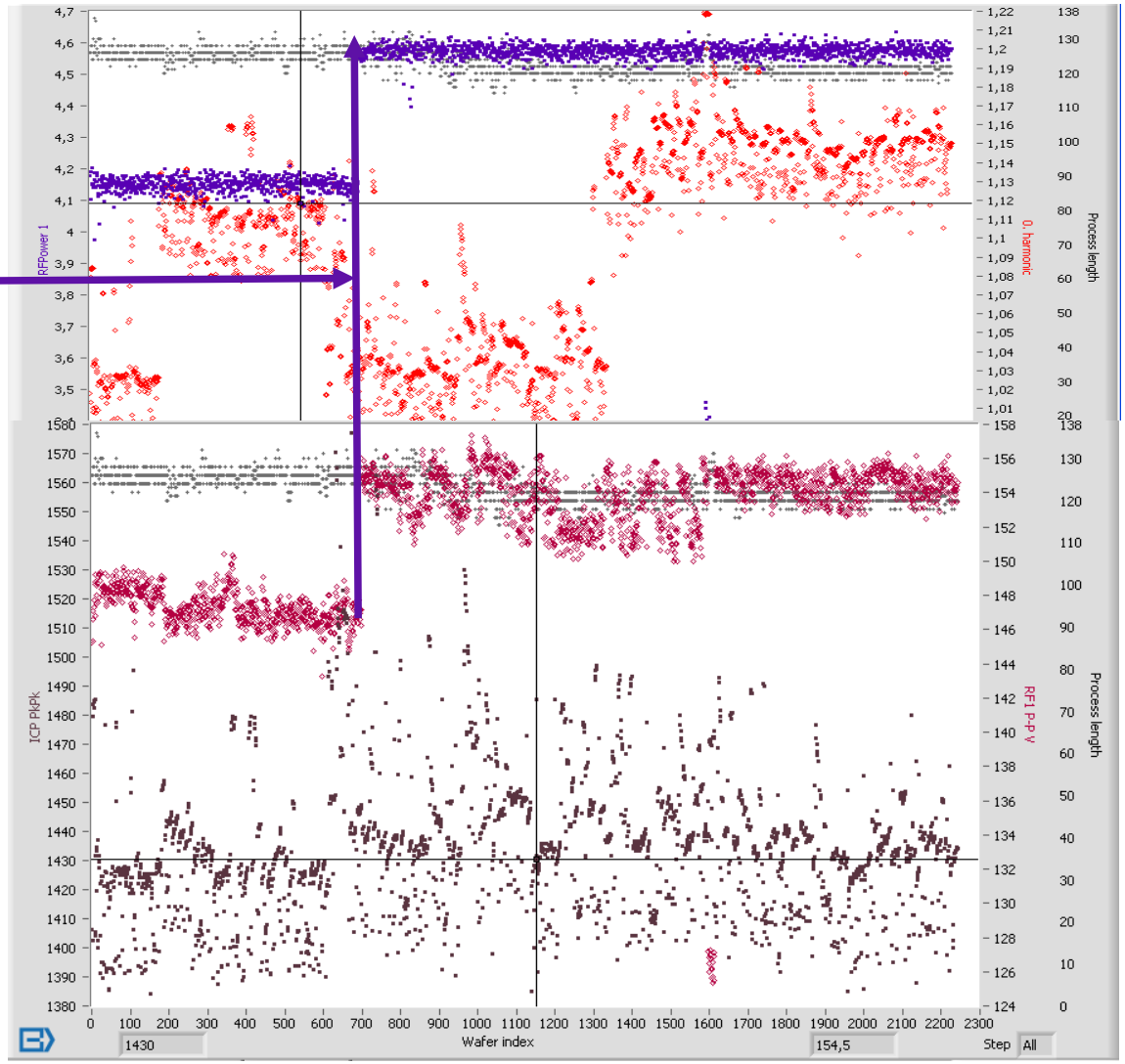

High pressure: Plasma current and density

- **Plasma current still shows the known, 'ceramic' pattern clearly.**
- **Only weak pattern in plasma density.**
- **RF Power adjustment not seen here.**
- **But ...**

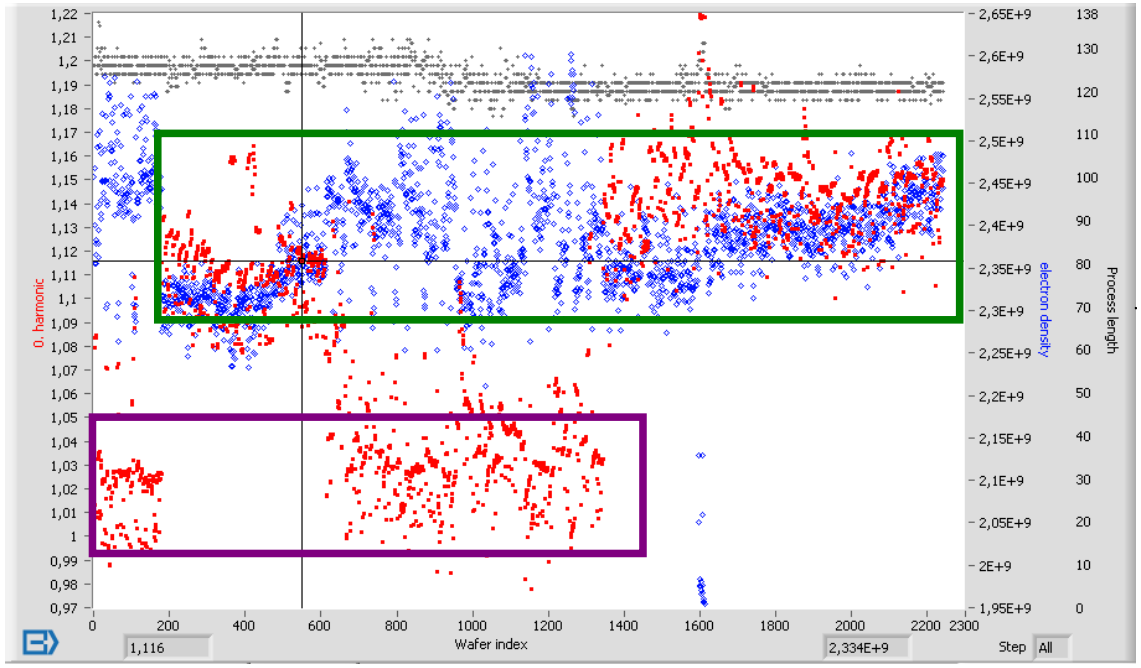

High pressure: Plasma current and collision rate

- … electron collision rate indicates impact of gas temperature – due to ohmic heating of electrons.
- Accommodation coefficient and so gas cooling at chamber wall depends strongly on surface conditions.
- Process pressure adaption shown <u>only</u> through collision rate.

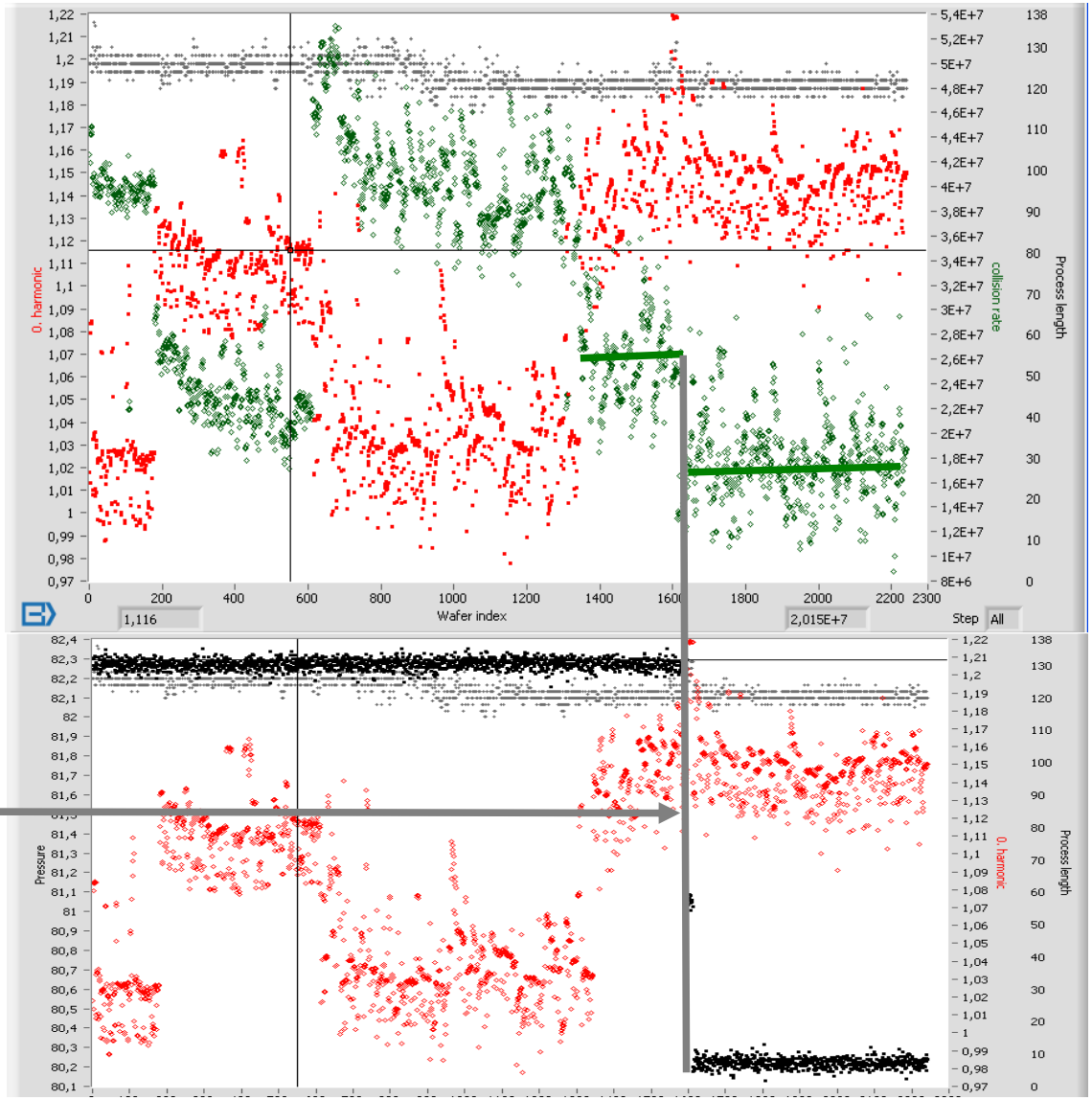

Conclusions

- **Process adaptation for etch rate and selectivity is best reflected in plasma parameters.**

- **The effects of ceramic chamber wall as spare part**
  - is well pronounced in plasma parameters and
  - depends on process, mainly the pressure.

- **Potential reasons for impact of ceramic chamber wall:**
  - Variations in heat flow from gas to chamber wall → Gas temperature.
  - Different permittivity of the ceramics.

- **Smart spare part management can be controlled by plasma parameters provided by model-based sensors.**